Villeroy & Boch 1748

Architectura Start Classic 110/600 Rail set

Product Image

Product Details

SKU:	**VSR04061B**
Brand:	Villeroy & Boch
Range:	Architectura Start
Warranty:	15 Years
WELS:	*3 Star 9 LPM, Reg #: S14232*

Additional Features

Required Product

Recommended Products

Additional Notes

* Adjustable 600mm Rail
* Easy Clean Silicon Nozzles
* Clear soap dish

Technical Specification

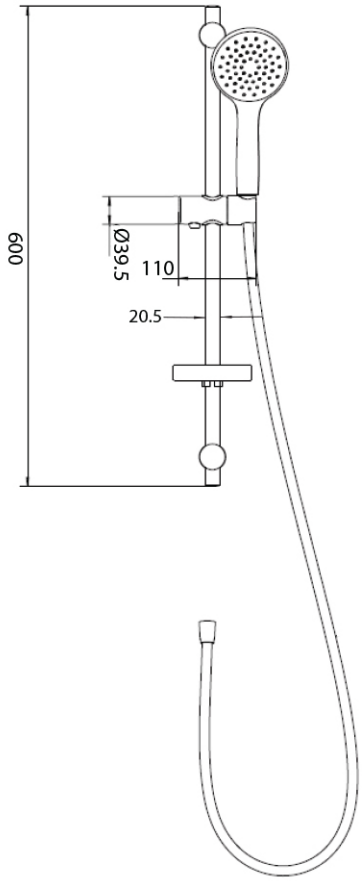

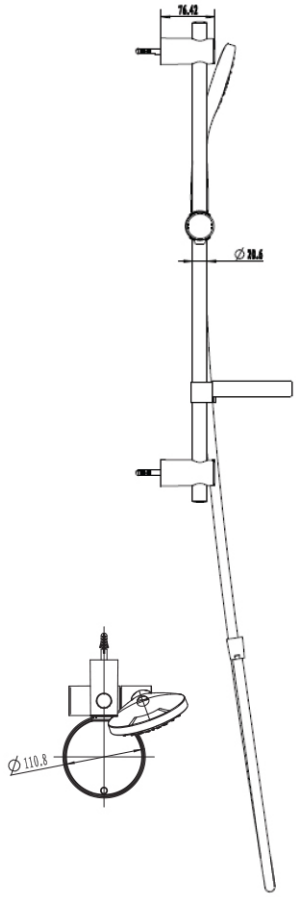

Note: All dimensions are in millimetres and are subject to normal manufacturing variations. Always use the physical product measurements for cut-outs and rough-ins as the technical details shown may differ from the actual product. Use acetic cured silicone sealant. Do not use epoxy type adhesives. Clean with damp cloth. Do not use abrasive cleaners, liquids or pastes.